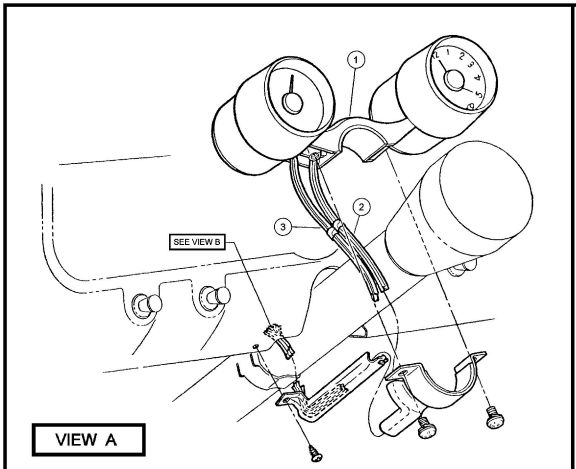

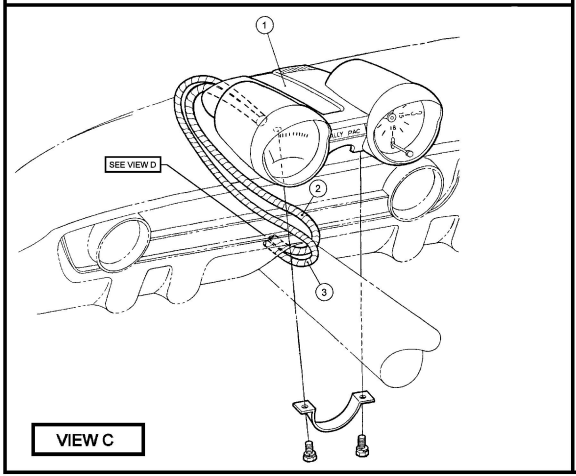

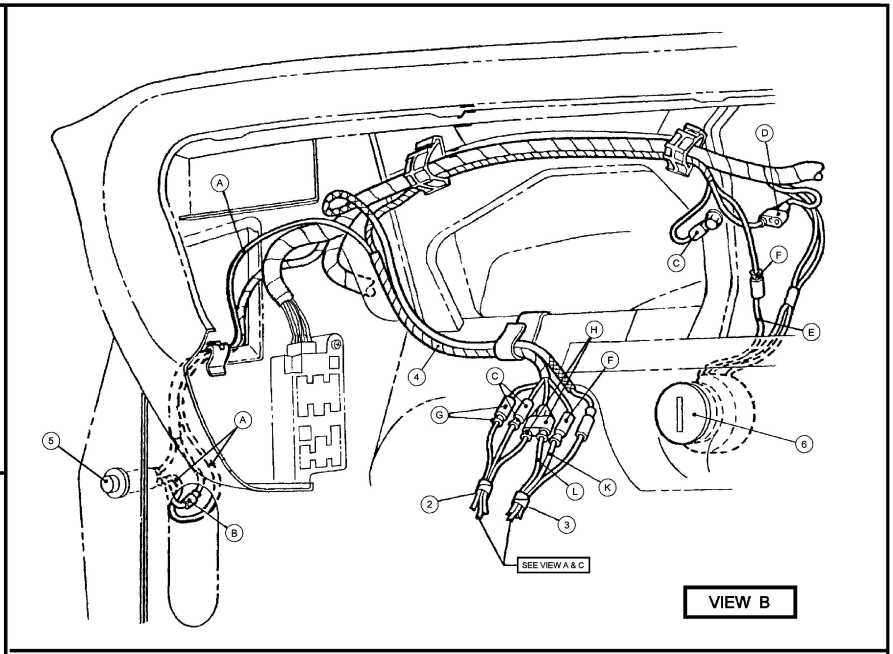

(A) 22 BLUE / BLACK STRIPE
(B) 54 GREEN / YELLOW STRIPE
(C) 57 BLACK
(D) 19 BLUE / RED STRIPE
(E) RED / GREEN STRIPE
(F) 64B RED WITH GREEN INSULATOR
(G) 22 BLUE / BLACK STRIPE WITH BLUE INSULATOR
(H) 19 BLUE / RED STRIPE WITH RED INSULATOR
(J) BLACK
(K) RED
(L) BLUE / RED STRIPE
(M) BLUE

(1) RALLY TACH & CLOCK ASM.
(2) PART OF CLOCK ASM.
(3) PART OF TACHOMETER ASM.
(4) RALLY TACH & CLOCK HARNESS ASM.
(5) COURTESY LAMP SWITCH
(6) IGNITION SWITCH

INSTRUCTION SHEET FOR 1964 TO 1966 RALLY TACH & CLOCK HARNESS ASM.