FORD

INSTRUCTIONS

MUSTANG, COUGAR, FAIRLANE, FALCON
Triangulated 4-Link System

control freak suspensions™
www.FreakRide.com

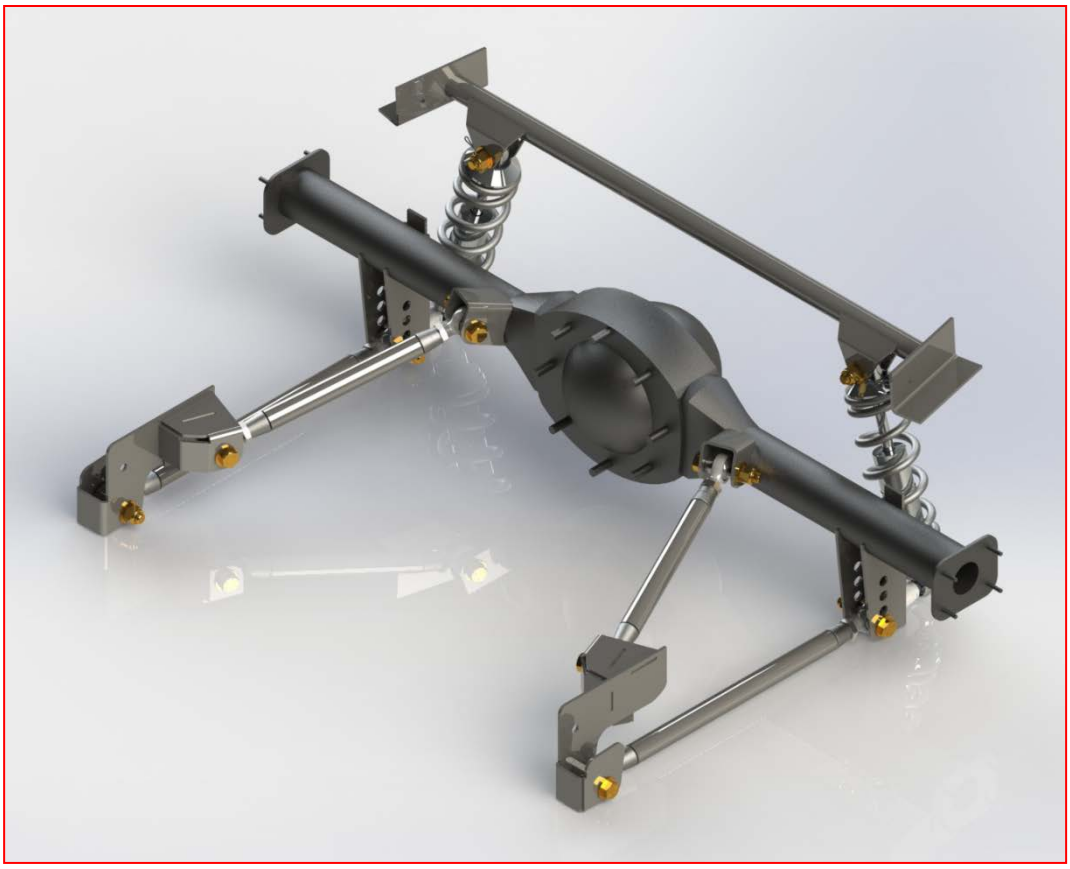

1962-65 FALCON (RS-2470)
1966-67 FAIRLANE (RS-2435)
1964-66 MUSTANG (RS-2400)
1967-73 MUSTANG (RS-2415)
1967-70 COUGAR (RS-2460

Revised: 6-1-2018

control freak
www.FreakRide.com

control freak
www.FreakRide.com

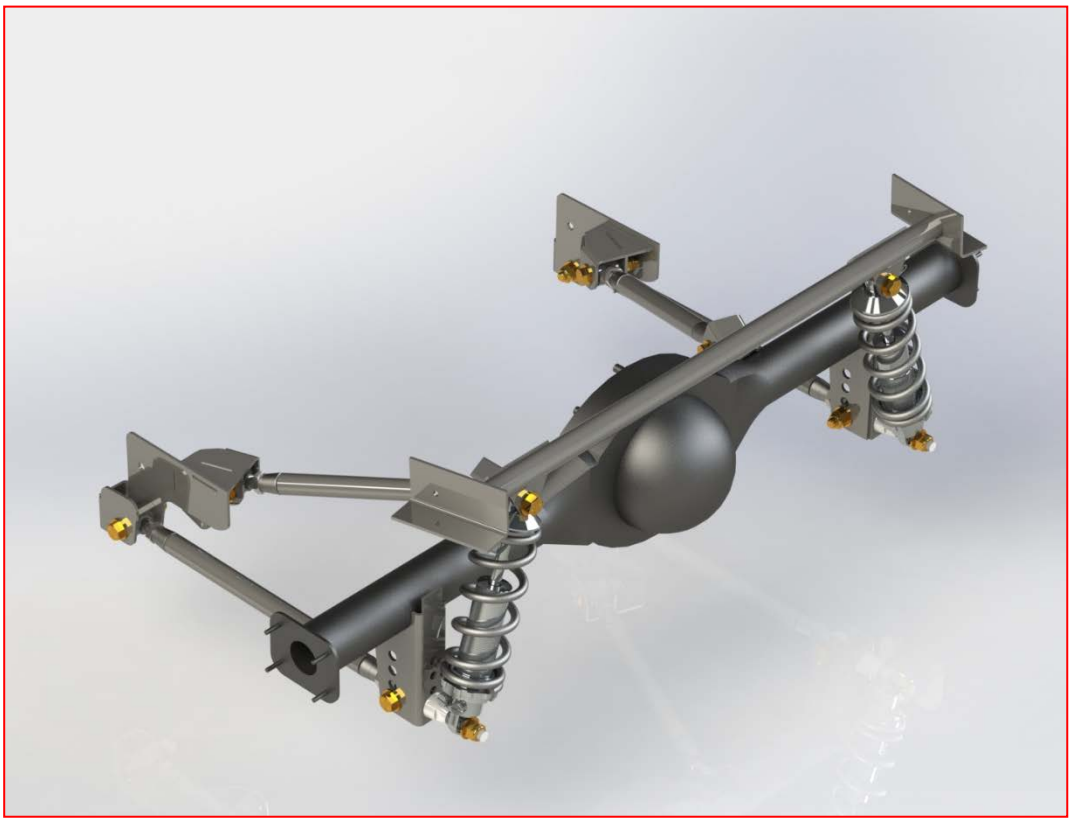

Installation Instructions

4-Link Triangulated Rear Suspension
Part # RS-2400 – 1964-66 Mustang
Part # RS-2415 – 1967-73 Mustang
Part # RS-2435 – 1966-67 Fairlane
Part # RS-2460 – 1967-70 Mercury Cougar
Part #RS-2470 – 1962-65 Ford Falcon

Sub-Frame System Contents

- Two (2) Forward Frame Brackets – Raw Steel
- Two (2) Lower Differential Brackets – Raw Steel
- Two (2) Small Upper Trailing Arm Differential Brackets – Raw Steel
- One (1) Upper Coil Over Mount Bar – Raw Steel
- Two (2) Powder Coated Upper Trailing Arms with Adjustable Ends
- Two (2) Powder Coated Lower Trailing Arms with Adjustable Ends
- Coil-Over Shocks & Springs
- All Necessary Grade 8 Hardware & Complete Instructions

Thank you for purchasing a world-class Control Freak Suspensions© Ford Mustang / Cougar 4-Link Triangulated Rear Suspension kit, manufactured in DeBary, Florida. We believe this system is the best available at any price. As with any aftermarket performance product, this product is recommended for off road use only. This system is typically subjected to uses that exceed its mechanical limits, so there is no warranty, expressed or implied. Blue Moon Services LLC and its Control Freak Suspensions brand cannot control how this product is installed or used. By purchasing this product, you are assuming all risks associated with its installation and use and agree to possess appropriate skills for its installation and use. Blue Moon Services LLC and its Control Freak Suspensions brand, our vendors and suppliers will not be held responsible, liable or accountable for any injury, damage, loss, penalties or fines that occur, directly or indirectly, from the installation and use of this product..

While installation is relatively easy for those with welding skills and moderate mechanical experience, novices should employ a professional for installation. Fit is guaranteed on vehicles that are unmolested…that is cars that have not suffered any chassis or significant sub-frame damage. Such damage can bend or alter the unitized body or chassis, making installation more difficult and may require chassis adjustment.

Read all of the instructions before starting installation.

IMPORTANT NOTES:

1. All brackets in this kit must be welded into place.
2. Use extra caution in jacking and stabilizing the vehicle for this installation. A lift is highly recommended.
3. Be certain to remove carpeting, insulation or other flammables from the area being welded or subjected to welding heat.

What Else Do I Need?

Everything you need is included in the purchase price. Installation requires welding. Disconnect your battery BEFORE welding. If you don't, you run the risk of ruining electronic ignition and entertainment components in the car.

Installation

1. Clean the metal or debris, rust, undercoating, paint or other elements in the bracket areas so shiny metal shows through. This provides a clean surface to weld to. On the differential, remove the stock spring perches and grind the welds smooth.
2. The most critical step is locating the forward frame brackets. Simply bolt the bracket to the forward leaf spring hole using the original bolt. This locates the forward frame brackets on each side of the vehicle. Just make certain it is vertical to the ground (90 Degrees to the frame)

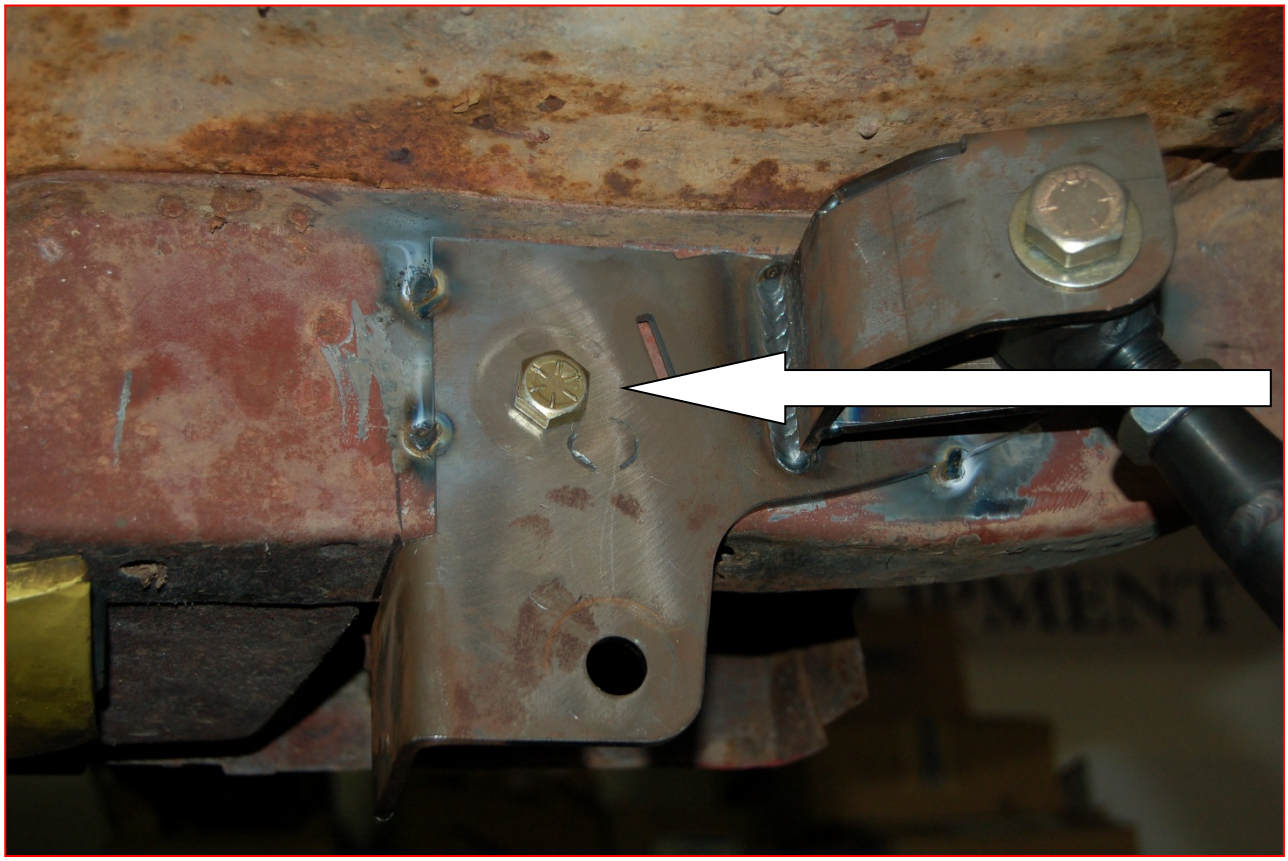

3. Tack the forward frame brackets into place as shown in the picture above and remove the bolt.

4. Assemble the upper and lower trailing arms. You will notice that one end of the trailing arms has a line through the cone-shaped end. That is for the left-hand thread large rod ends. The black bushing housings have a right-hand thread. Be certain to use anti-seize on the threads to prevent cross threading. Make certain the upper trailing arms are adjusted to the same length, with about three (3) to four (4) threads showing outside the jam nut. Do the same for the lower trailing arms. The diagrams below show the assembly of the upper and lower trailing arms

UPPER TRAILING ARM PARTS & HARDWARE			
ITEM	PART NUMBER	DESCRIPTION	QUANTITY
1	FBE 12	MICROFLEX 3/4" FORGED ROD END W/ P&J BUSHINGS	1
2	XML-12	3/4" ROD END - LH THREADS	1
3	RS-9001	ROD END SLEEVE	2
4	75FNFJL8Z	3/4" JAM NUT - LH THREADS	1
5	75FNFJ8Z	3/4" JAM NUT - RH THREADS	1
6	62C350HC8Z	5/8"-11 X 3.50" HEX HEAD BOLT GRADE 8 YZ	2
7	62CNN8Z	5/8" -11 GRADE 8 NYLOCK NUT	2
8	62NWSHZ	5/8" SAE FLAT WASHER	4

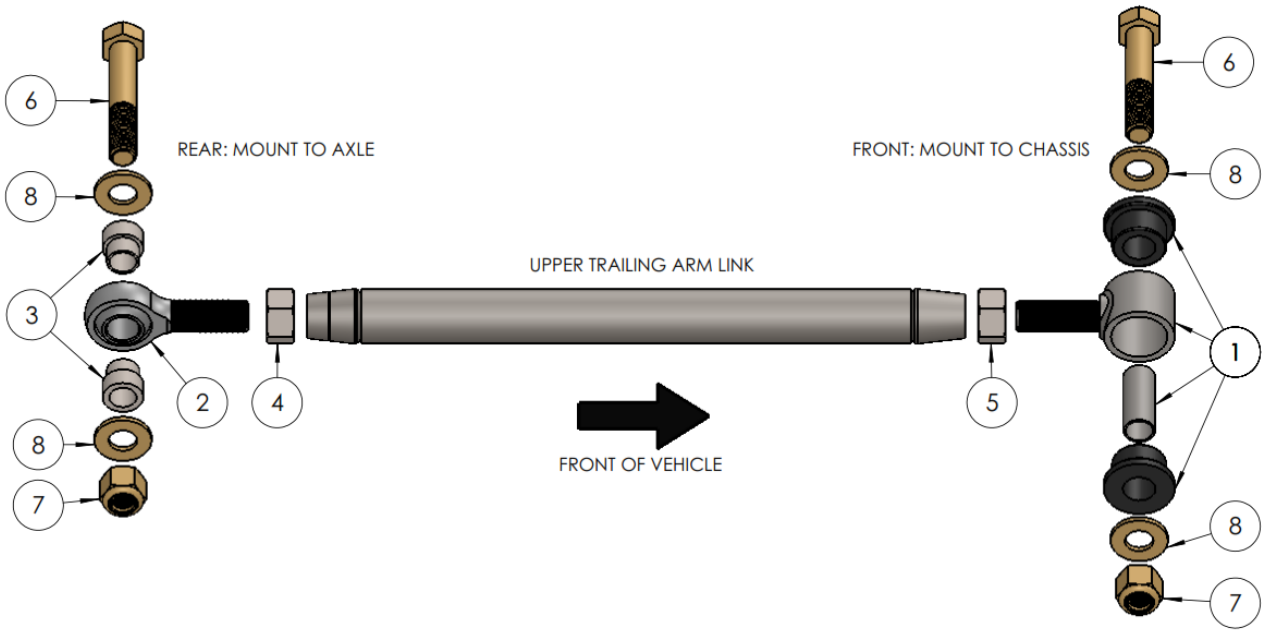

LOWER TRAILING ARM PARTS & HARDWARE			
ITEM	PART NUMBER	DESCRIPTION	QUANTITY
1	FBE 12	MICROFLEX 3/4" FORGED ROD END W/ P&J BUSHINGS	1
2	XML-12	3/4" ROD END - LH THREADS	1
3	RS-9001	ROD END SLEEVE	2
4	75FNFJL8Z	3/4" JAM NUT - LH THREADS	1
5	75FNFJ8Z	3/4" JAM NUT - RH THREADS	1
6	62C350HC8Z	5/8"-11 X 3.50" HEX HEAD BOLT GRADE 8 YZ	2
7	62CNN8Z	5/8" -11 GRADE 8 NYLOCK NUT	2
8	62NWSHZ	5/8" SAE FLAT WASHER	4

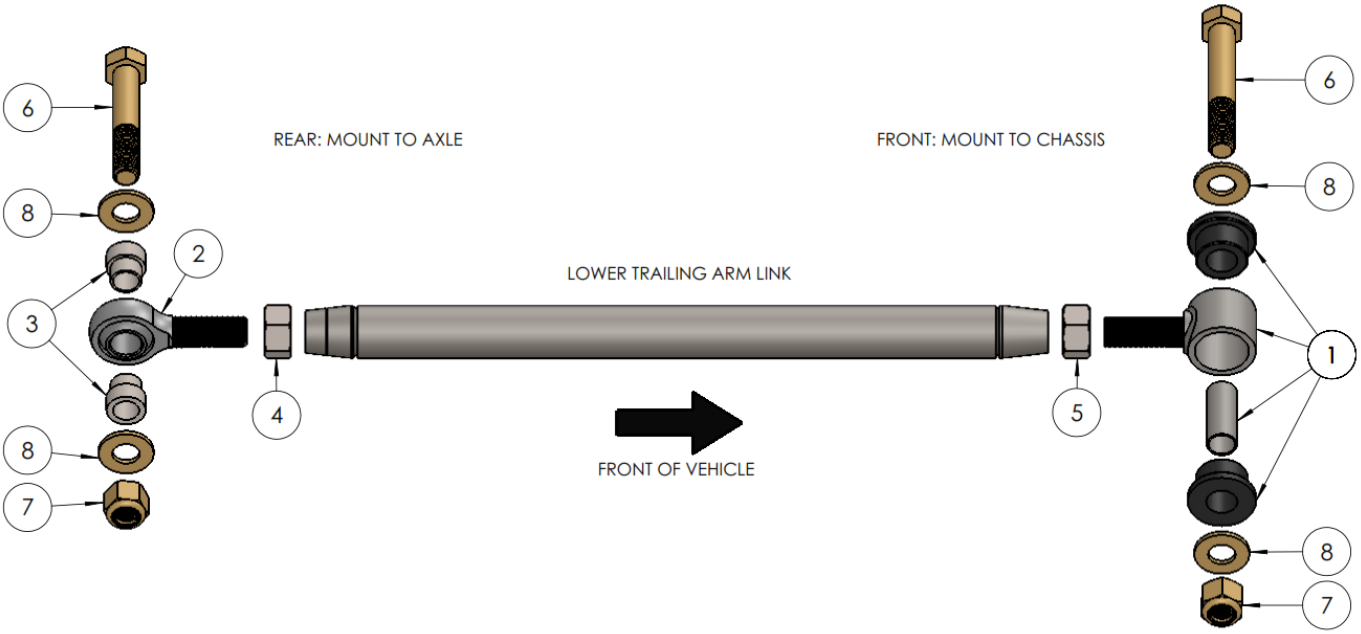

5. The bushing housing ends attach to the forward frame brackets. Attach the upper and lower trailing arms to the forward frame brackets and hand tighten the nuts onto the bolts. On the hanging ends of the trailing arms, with the large silver rod ends, attach the corresponding upper and lower trailing arm brackets. Refer to the pictures inside the front cover to see which brackets go where. Hand tighten the nuts and bolts.
6. You are now ready to put the differential into position. Place the differential **at ride height and center it** into the vehicle, making certain the housing flanges are the same distance from the frame rails on both sides of the car.

7. Set a rough pinion angle before locating the upper & lower mounts. If you can get to it, hold an angle finder on the crank pulley and note the angle. If you can't get into the crank pulley area with an angle finder, use the angle of the transmission tailshaft. Now place the angle finder on the front of the rear axle pinion and rotate the axle to duplicate the same angle. Placing the differential on two (2) jack stands and using a floor jack to adjust the angle is the simplest way to make even fine adjustments. Set the pinion angle from zero degrees to minus one-half degree. You will be able to make adjustments once the system is installed. This setting is a median setting for most applications. The drawing below will help you netter understand setting the pinion angle.

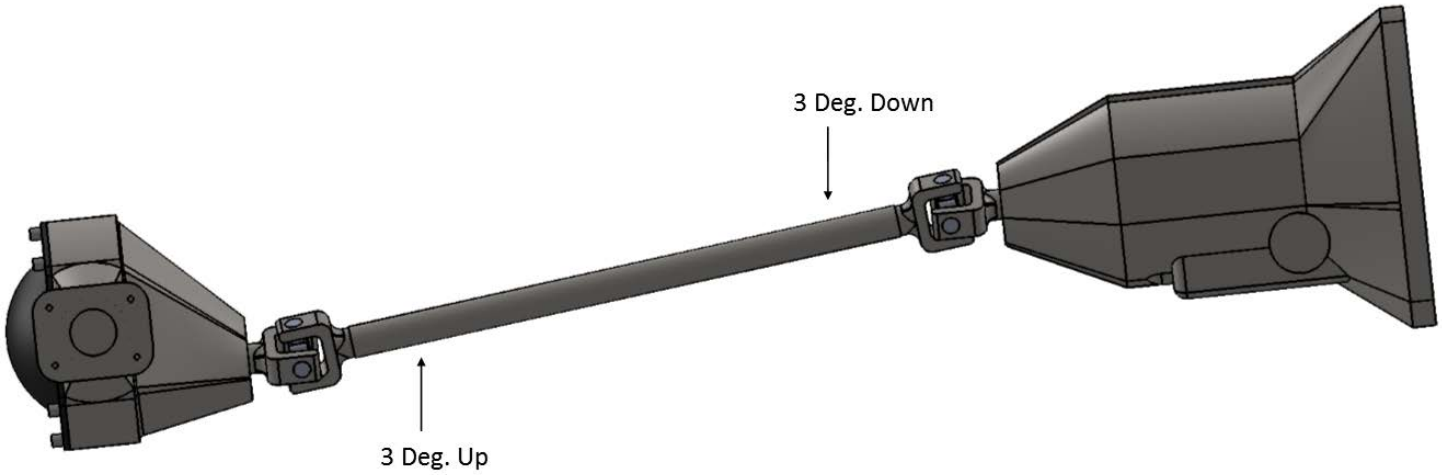

8. Place the assembled trailing arms, with brackets attached, onto the differential. This shows exactly where the brackets should be. Once again, check the centering of the differential unit and the pinion angle. When it is all correct, tack weld all the brackets into position

Upper Shock Bar

Note that the upper coil over mount bar brackets have one side that is angled. That is the rear of the bar. On 1969-1970 Mustangs & Cougars, the angled bracket should be about 3/16" away from the angled trunk sheet metal. On earlier vehicles it will be about ¾" away. Regardless, the coil over shock should be vertical when bolted up and viewed from the side.

9. Attach the coil over machined studs to the lower trailing arm brackets on the differential using the second from the bottom hole. Bolt the coil over to the lower stud. Place the upper shock bar into position between the frame rails. Extend the coil over shock so it is touching the upper shock bar and the appropriate bracket. Now, attach the upper coil overs to the bar. Just hand tighten the bolts. Looking from the side, make certain the coil over shock is parallel with the face of the lower trailing arm bracket. When it is parallel, tack weld the upper shock bar to the upper frame rails.
10. Check once again to make certain that the differential housing is at ride height, is centered in the vehicle and that the pinion angle is still correct. When confirmed, remove the trailing arms and loosen the axles from the differential housing. When welding the differential brackets, do a little at a time, making certain not to melt any seals on the axle tubes.
11. Once cooled, reassemble the system, making certain all bolts are tight. Check and re-check all bolts for correct tightness.
12. You can now adjust the coil over shocks leaving about 1" of threads showing below the height adjustment. Turn the valve all the way counterclockwise and then count ten turns clockwise. This will provide a preliminary setting for the coil over adjustments.

13. Don't worry if the vehicle is sitting higher than you expected. Set the coil overs to sit about ¾" higher than where you want it because the shocks will settle by close to that after 15-20 miles of driving.
14. Check your pinion angle and make certain it is not more than negative ½ degree. Make necessary adjustments.
15. Congratulations…your system is installed.
16. If you purchased the adjustable rear sway bar, now is the time to install it. Refer to the directions included with the sway bar.

IMPORTANT

DISCLAIMER In an effort to offer our customers value and service, Blue Moon Services LLC d/b/a Control Freak Suspensions (herein referred to as Control Freak) reserves the right to change suppliers, specifications, colors, prices, materials. Each of the previous items is subject to change without notice. Control Freak is not responsible for any typographical errors or misinterpretations. Quantities are limited on some items.

WARRANTY DISCLAIMER The purchaser understands and recognizes that racing parts, specialized high-performance equipment, and all parts and services sold by Control Freak, are exposed to many and varied conditions due to the manner in which they are installed and used. Control Freak makes no warranties, either expressed or implied, including any warranty of merchantability or fitness for a particular purpose other than those contained in its current catalog with respect to the goods identified on the face of the invoice. There is no warranty expressed or implied as to whether the goods sold hereby will protect purchaser or ultimate user of such goods from injury or death. Control Freak assumes no liability for these suspension products.

DAMAGE CLAIMS Always inspect your package upon delivery. Inspect all packages in the presence of the delivery driver. The driver must note any damage. Ask the driver the Carrier's procedures for handling damage claims. You must hold the original box, packing material and damaged merchandise for inspection or the carrier will not honor the claim. Notify Control Freak for instructions on returning damaged goods. Control Freak is not responsible if no notification is given within two (2) days of receipt.

SHORTAGES Always check the contents of your delivery to insure all the parts that you ordered were received. Please read the invoice and Pack Lists. Double check all packing materials, small items may be wrapped inside with these products. Shortages may occur from damage to the box, so save all packing materials. Inspect the box for holes that would allow parts to fall out. If you are missing any item(s) be sure to check your invoice and/or Pack List for back orders or canceled items before calling the customer service department. If Control Freak has to split a shipment into multiple boxes, packages may be delivered on different days. You need to contact the customer service department within 5 days of delivery to assure the prompt replacement. Control Freak assumes no liability after this period.

WARRANTY CLAIMS If an item has a manufacturer's warranty as being free from defects we will exchange that item. If the item has been used and you are requesting warranty work, Control Freak will determine the validity of the claim. If you have any questions, please contact customer service.

RETURNS Our return policy applies to all suspension systems ***except*** Independent Front Suspension (IFS) systems. Control Freak wants you to be satisfied with your purchase. If within five (5) days after you receive your shipment you are not satisfied, you may return the item for refund, exchange or credit. **This does not apply to any IFS systems**. All exchanged or returned merchandise must be in original factory condition with no modifications or alterations. Returned merchandise must include all original packaging materials, warranty cards, manuals, and accessories. If the items being returned need to be repackaged there will be a re-packing charge of 15%. Pack the item in a sturdy box and include a copy of your invoice and notify us of the return. You must ship orders back **PRE-PAID. WE DO NOT ACCEPT COD SHIPMENTS**. All exchanges need to have reshipping charges included. Items that are returned after 5 days are subject to 15% restocking charges. **Absolutely no returns on custom built suspension systems or other special-order merchandise. All IFS systems are considered custom builds. All exchange and/or repair is at the discretion of Control Freak Suspensions.**

Some items may not be street legal in some countries. Such items may be legal for racing vehicles only which may not be used upon a highway

FORD

INSTRUCTIONS

MUSTANG, COUGAR, FAIRLANE, FALCON
Triangulated 4-Link System

Control Freak Suspensions
485 S. Shell Rd., Suite 5B
DeBary, FL 32713
407-696-2772
888-325-6462 Toll Free
407-696-6216 Fax
www.FreakRide.com